SV08-40 Spool, 4-Way, 2-Position

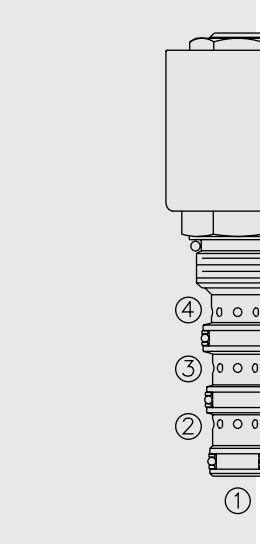

SYMBOLS

USASI/ISO:

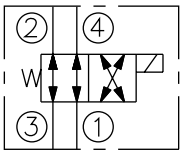

TRANSITION:

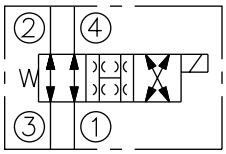

PERFORMANCE (Cartridge Only)

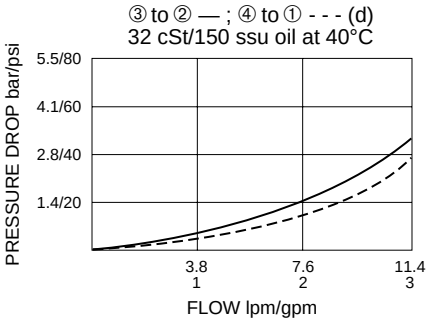

DESCRIPTION

A solenoid-operated, 4-way, 2-position, direct-acting spool-type, screw-in hydraulic cartridge valve.

OPERATION

When de-energized, the **SV08-40** flow paths are ③ to ②, and ④ to ①.

When energized, the valve's spool shifts to open ③ to ④, and ② to ①.
All ports are open at cross-over.

Operation of Manual Override Option: To override, push button in and twist counterclockwise 180°. The internal spring will push the button out. In this position, the valve may be only partially shifted. To assure full override shift, pull the button out to its fullest extension and hold it in this position.

To return to normal valve function, push button in, twist clockwise 180°, and release. Override will be detented in this position.

FEATURES

- Continuous-duty rated solenoid.
- Hardened precision spool and cage for long life.
- Optional coil voltages and terminations.
- Efficient wet-armature construction.
- All ports may be fully pressurized.
- Cartridges are voltage-interchangeable.
- Manual override option.
- Optional waterproof E-Coils rated up to IP69K.
- Unitized, molded coil design.
- Compact size.

RATINGS

Operating Pressure: 207 bar (3000 psi)

Flow: See Performance Chart

Internal Leakage: 82 cc/minute (5 cu. in./minute) max. at 207 bar (3000 psi)

Temperature: -40 to 120°C with standard Buna seals

Coil Duty Rating: Continuous from 85% to 115% of nominal voltage

Initial Coil Current Draw at 20°C: Standard Coil: 1.2 amps at 12 VDC
0.13 amps at 115 VAC (full wave rectified);
E-Coil: 1.4 amps at 12 VDC; 0.7 amps at 24 VDC

Minimum Pull-in Voltage: 85% of nominal at 207 bar (3000 psi)

Filtration: See page 9.010.1

Fluids: Mineral-based or synthetics with lubricating properties at viscosities of 7.4 to 420 cSt (50 to 2000 sus); See Temperature and Oil Viscosity, page 9.060.1

Installation: No restrictions; See page 9.020.1

Cavity: VC08-4; See page 9.108.1

Cavity Tool: CT08-4XX; See page 8.600.1

Seal Kit: SK08-4X-MMM; See page 8.650.1

Coil Nut: Part No. 7004400;
For E-coils manufactured prior to 1-1-04, see page 3.400.1 for coil nut info.

DIMENSIONS

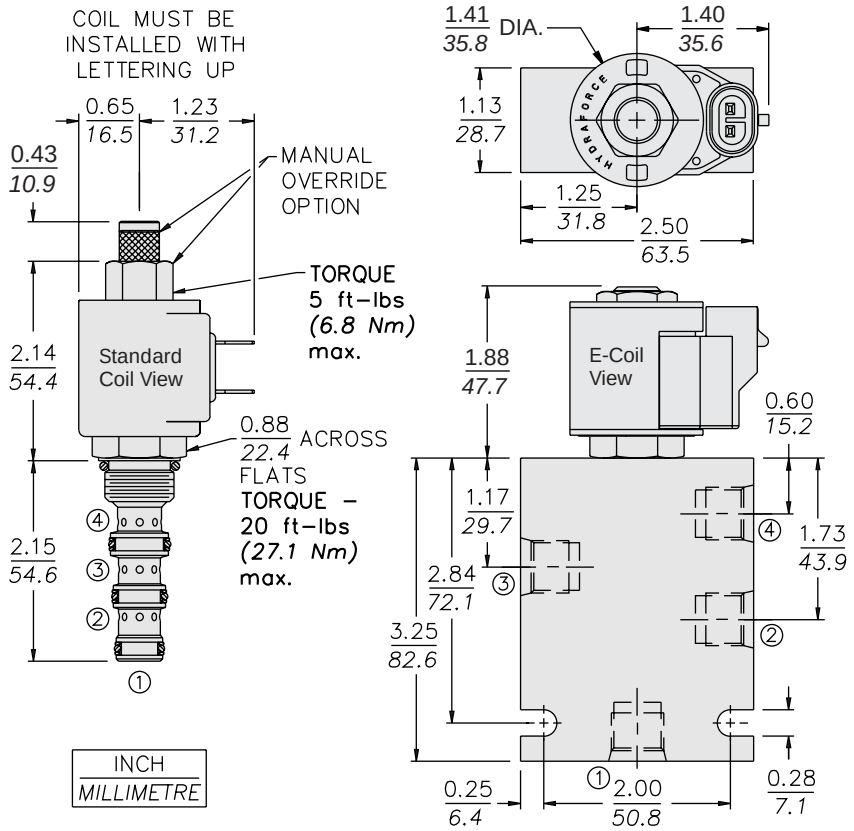

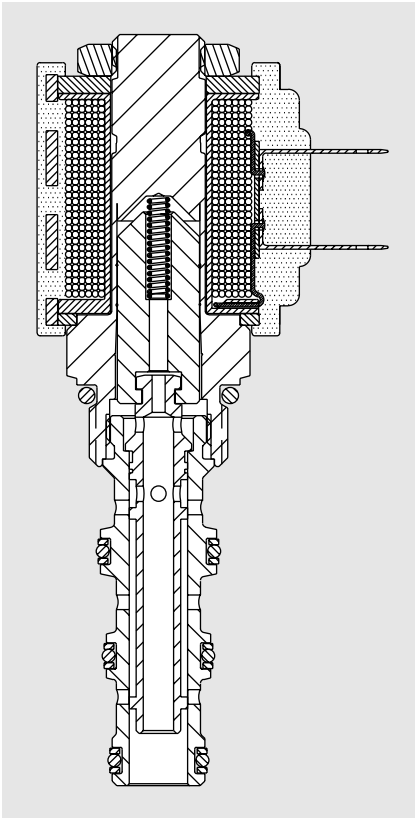

MATERIALS

Cartridge: Weight: 0.13 kg. (0.28 lbs.); Steel with hardened work surfaces. Zinc-plated exposed surfaces; Buna N O-rings and back-ups standard.

Standard Ported Body: Weight: 0.27 kg. (0.60 lbs.); Anodized high-strength 6061 T6 aluminum alloy, rated to 207 bar (3000 psi); Ductile iron bodies available; dimensions may differ. See page 8.008.1.

Standard Coil: Weight: 0.11 kg. (0.25 lbs.); Unitized thermoplastic encapsulated, Class H high temperature magnetwire. See page 3.200.1.

E-Coil: Weight: 0.14 kg. (0.3 lbs.); Perfect wound, fully encapsulated with rugged external metal shell; Rated up to IP69K with integral connectors. **See page 3.400.1 for all E-Coil retrofit applications.**

TO ORDER

SV08-40__ - __ __ __ - __ - __ __ __ __ __

Option

None	(Blank)
Manual Override	**M**

For Manual Override options see page 1.001.1

Porting

Cartridge Only	**0**
SAE 6	**6T**
1/4 in. BSP*	**2B**
3/8 in. BSP*	**3B**

*BSP Body; U.K. Mfr. Only

Seals

Buna N (Std.)	**N**
Fluorocarbon	**V**

Voltage

Std. Coil

0	Less Coil**
10	10 VDC†
12	12 VDC
24	24 VDC
36	36 VDC
48	48 VDC
24	24 VAC
115	115 VAC
230	230 VAC

**Includes Std. Coil Nut

† DS, DW or DL terminations only.

E-Coil

10	10 VDC
12	12 VDC
20	20 VDC
24	24 VDC

Termination (VDC)

Std. Coil

DS	Dual Spades
DG	DIN 43650
DL	Leadwires (2)
DL/W	Leads w/Weatherpak® Connectors
DR	Deutsch DT04-2P

Termination (VAC)

Std. Coil

AG	DIN 43650
AP	1/2 in. Conduit

Termination (VDC)

E-Coil

ER	Deutsch DT04-2P (IP69K Rated)
EY	Metri-Pack® 150 (IP69K Rated)

Coils with internal diode are available. Consult factory.