SV08-23 Poppet, 2-Way, Normally Open

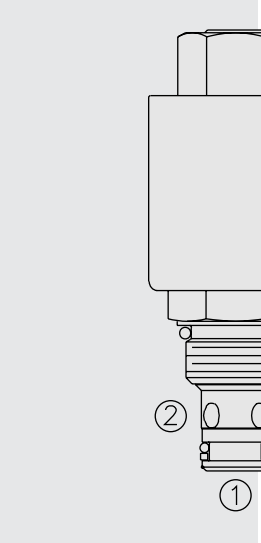

SYMBOLS

USASI:

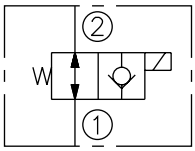

ISO:

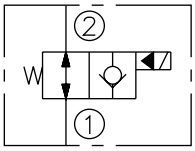

PERFORMANCE (Cartridge Only)

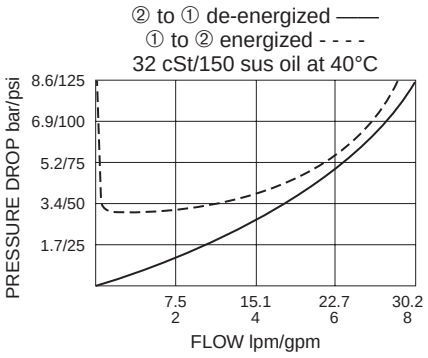

DESCRIPTION

A solenoid-operated, two-way, poppet-type, normally open, screw-in, hydraulic cartridge valve designed for low leakage in load-holding applications.

OPERATION

When de-energized, the **SV08-23** poppet lifts to open flow from ② to ①. Flow is also open from ① to ②.

When energized, the cartridge acts as a check valve, allowing flow from ① to ②, while blocking flow from ② to ① after overcoming the solenoid force (requires 3.4 to 10.3 bar / 50 to 150 psi).

Operation of Manual Override Option: To override, push and hold override button.

FEATURES

- Continuous-duty rated solenoid.
- Hardened seat for long life and low leakage.
- Optional coil voltages and terminations.
- Efficient wet-armature construction.
- Cartridges are voltage interchangeable.
- Unitized, molded coil design.
- Manual override option.
- Optional waterproof E-Coils rated up to IP69K.
- Industry common cavity.
- Compact size.

RATINGS

Operating Pressure: 207 bar (3000 psi)

Flow: See Performance Chart

Internal Leakage: 0.15 cc/minute (3 drops/minute) max. at 207 bar (3000 psi)

Temperature: -40 to 120°C with standard Buna seals

Coil Duty Rating: Continuous from 85% to 115% of nominal voltage

Response Time: First indication of change of state with 100% voltage supplied at 80% of nominal flow rating: Energized: 30 msec.; De-energized: 60 msec.

Initial Coil Current Draw at 20°C: Standard Coil: 1.2 amps at 12 VDC; 0.13 amps at 115 VAC (full wave rectified). E-Coil: 1.4 amps at 12 VDC; 0.7 amps at 24 VDC

Minimum Pull-in Voltage: 85% of nominal at 207 bar (3000 psi)

Filtration: See page 9.010.1

Fluids: Mineral-based or synthetics with lubricating properties at viscosities of 7.4 to 420 cSt (50 to 2000 sus); See Temperature and Oil Viscosity, page 9.060.1

Installation: No restrictions; See page 9.020.1

Cavity: VC08-2; See page 9.108.1

Cavity Tool: CT08-2XX; See page 8.600.1

Seal Kit: SK08-2X-T; See page 8.650.1

Coil Nut: Part No. 7004410;
For E-coils manufactured prior to 1-1-04, see page 3.400.1 for coil nut info.

DIMENSIONS

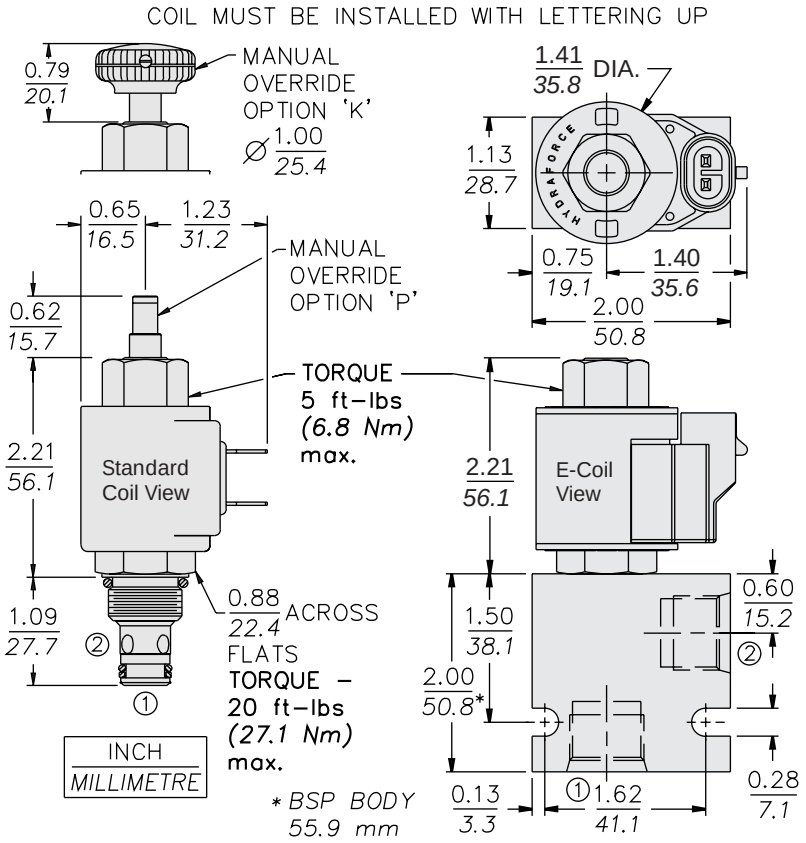

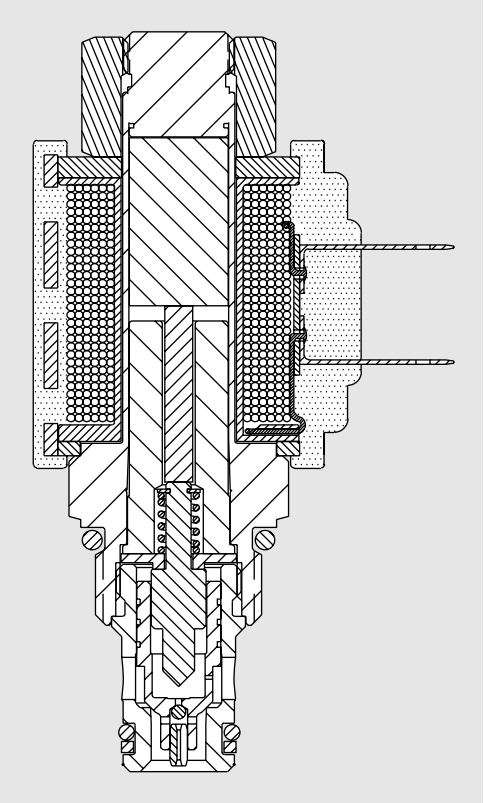

MATERIALS

Cartridge: Weight: 0.09 kg. (0.20 lbs.) Steel with hardened work surfaces. Zinc-plated exposed surfaces. Buna N O-rings and polyester elastomer back-up standard.

Standard Ported Body: Weight: 0.16 kg. (0.35 lbs.) Anodized high-strength 6061 T6 aluminum alloy, rated to 207 bar (3000 psi). Ductile iron bodies available; dimensions may differ. See page 8.008.1

Standard Coil: Weight: 0.11 kg. (0.25 lbs.) Unitized thermoplastic encapsulated, Class H high temperature magnetwire. See page 3.200.1

E-Coil: Weight: 0.14 kg. (0.3 lbs.) Fully encapsulated with rugged external metal shell. Rated up to IP69K with integral connectors. **Note: See page 3.400.1 for all E-Coil retrofit applications.**

TO ORDER

SV08-23__ - __ __ __ - __ - __ __ __ __ __

Option

None	(Blank)
152µ Screen	**S**
Manual Override without knob	**P**
Manual Override with knob	**K**

Porting

Cartridge Only	**0**
SAE 4	**4T**
SAE 6	**6T**
1/4 in. BSP*	**2B**
3/8 in. BSP*	**3B**
1/2 in. BSP*	**4B**

*BSP Body; U.K. Mfr. Only

Seals

Buna N (Std.)	**N**
Fluorocarbon	**V**

Voltage

Std. Coil

0	Less Coil**
10	10 VDC†
12	12 VDC
24	24 VDC
36	36 VDC
48	48 VDC
24	24 VAC
115	115 VAC
230	230 VAC

**Includes Std. Coil Nut

† DS, DW or DL terminations only.

E-Coil

10	10 VDC
12	12 VDC
20	20 VDC
24	24 VDC

Termination (VDC)

Std. Coil

DS	Dual Spades
DG	DIN 43650
DL	Leadwires (2)
DL/W	Leads w/Weatherpak® Connectors
DR	Deutsch DT04-2P

Termination (VAC)

Std. Coil

AG	DIN 43650
AP	1/2 in. Conduit

Termination (VDC)

E-Coil

ER	Deutsch DT04-2P (IP69K Rated)
EY	Metri-Pack® 150 (IP69K Rated)

Coils with internal diode are available. Consult factory.