CV10-24 Check Valve

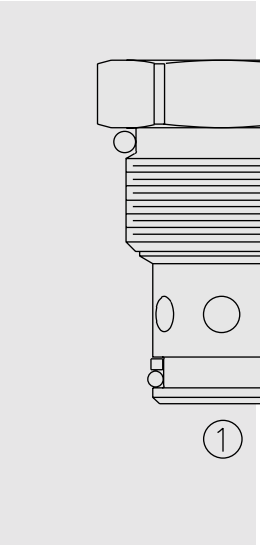

SYMBOLS

USASI:

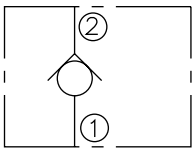

ISO:

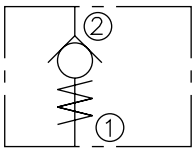

PERFORMANCE (Cartridge Only)

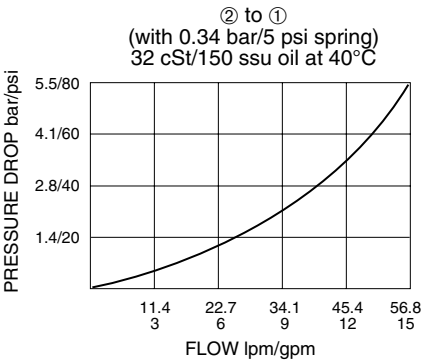

DESCRIPTION

A screw-in, cartridge-style, hydraulic check valve for use as a blocking or load-holding device.

OPERATION

The **CV10-24** allows flow passage from ② to ①, while blocking flow from ① to ②.

The cartridge has a fully guided check which is spring-biased closed until sufficient pressure is applied at ② to open to ①.

Note: High shock/rapid actuation applications may require a high load option. Consult factory.

FEATURES

- Low check mass for anti-cavitation applications.
- Hardened seat for long life and low leakage.
- Optional bias springs for back-pressure application flexibility.
- Industry common cavity.

RATINGS

Operating Pressure: 240 bar (3500 psi)

Flow: See Performance Chart

Internal Leakage: 0.25 cc/minute (5 drops/minute) max. at 207 bar (3000 psi)

Crack Pressure Defined: Gauge psi evident at ② at 16.4 cc/minute (1 cu. in./minute) attained at ①

Standard Bias Springs at Crack: 0.35 bar (5 psi); 1.7 bar (25 psi); 3.8 bar(55 psi)

Temperature: -40 to 120°C

Filtration: See page 9.010.1

Fluids: Mineral-based or synthetics with lubricating properties at viscosities of 7.4 to 420 cSt (50 to 2000 ssu)

Installation: No restrictions; See page 9.020.1

Cavity: VC10-2; See page 9.110.1

Cavity Tool: CT10-2XX; See page 8.600.1

Seal Kit: SK10-2X-B; See page 8.650.1

CV10-24

DIMENSIONS

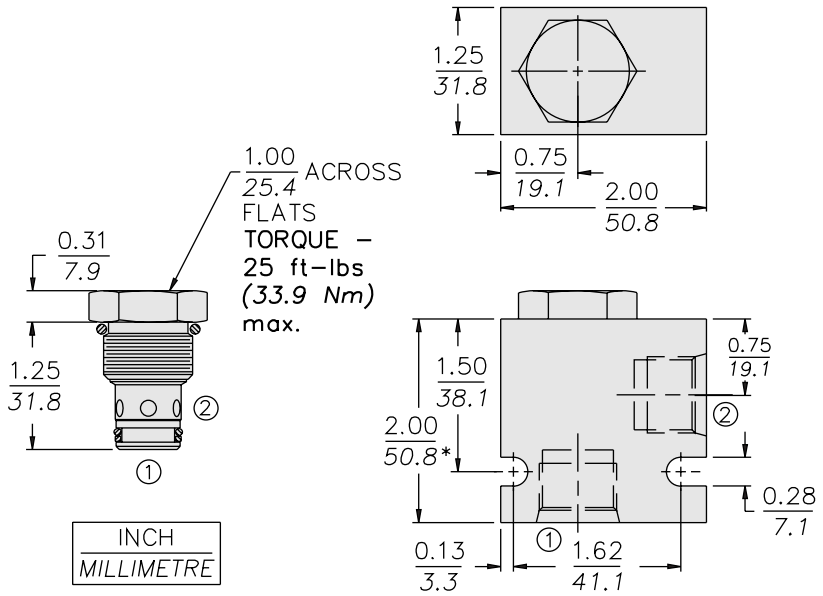

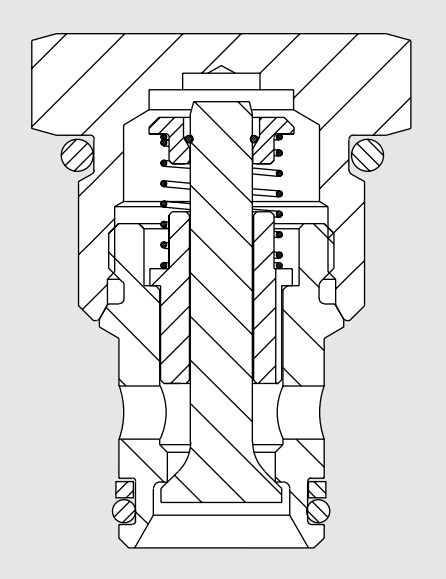

MATERIALS

Cartridge: Weight: 0.08 kg. (0.17 lbs.); Steel with hardened work surfaces; Zinc-plated exposed surfaces; Buna N O-rings and polyester elastomer back-ups standard.

Standard Ported Body: Weight: 0.16 kg. (0.35 lbs.); Anodized high-strength 6061 T6 aluminum alloy, rated to 240 bar (3500 psi); See page 8.010.1. Ductile iron and steel bodies available; dimensions may differ; consult factory.

TO ORDER

CV10-24 - __ - __ - __ __

Porting

Cartridge Only	**0**
SAE 6	**6T**
SAE 8	**8T**
1/4 in. BSP*	**2B**
3/8 in. BSP*	**3B**
1/2 in. BSP*	**4B**

*BSP Body; U.K. Mfr. Only

Seals

N Buna N (Std.)
V Fluorocarbon

Bias Spring

05 0.34 bar (5 psi)